GENERAL NOTES;

1. THIS DRAWING SHOWS THE GENERAL SHAPE AND APPROXIMATE PROFILE OF THE SHAFT AT THE INTENDED LOCATION OF THE CLOSURE. USE THE DRAWING AS A GUIDE FOR FIELD LAYOUT OF THE CLOSURE. FIELD VERIFY DIMENSIONS PRIOR TO FABRICATION.

2. REMOVE TREES, VEGETATION AND FENCING AS NEEDED TO INSTALL STRUCTURE. DISPOSE OF DEBRIS AT THE DIRECTION OF THE PROJECT MANAGER.

3.TUBULAR STEEL, STEEL PLATES, AND SHAPES SHALL BE WEATHERING STEEL AS SPECIFIED. WELD ALL JOINTS. ROUND OR CHAMFER ALL SHARP EDGES AND CORNERS.

4. TOLERANCES ON THE CENTER--TO-CENTER DIMENSIONS BETWEEN POSTS SHALL BE $\pm\frac{1}{16}$".

5. PLACE A SURVEY MARKER, PROVIDED BY THE PROJECT MANAGER, INTO THE GROUTED RIM OF CULVERT #3.

CAUTION - THIS PROJECT REQUIRES CONSTRUCTION WORK IN, AROUND, AND OVER HAZARDOUS AND UNPROTECTED MINE SHAFTS, STOPES, ADITS, HIGHWALLS AND OTHER FEATURES WHICH MAY BE UNSTABLE. THE CONTRACTOR SHALL BE RESPONSIBLE FOR THOROUGHLY INVESTIGATING THE SITE CONDITIONS AND SCHEDULING EQUIPMENT, EQUIPMENT OPERATORS, OPERATIONS, PERSONNEL AND SAFETY PROCEDURES TO PREVENT ACCIDENTS AND INJURIES.

NOTE: TO REDUCE THE LOAD ON THE PUF PLUG, THE CONTRACTOR SHALL USE SMALL SKID-STEER EQUIPMENT TO SPREAD AND LEVEL THE FILL MATERIAL

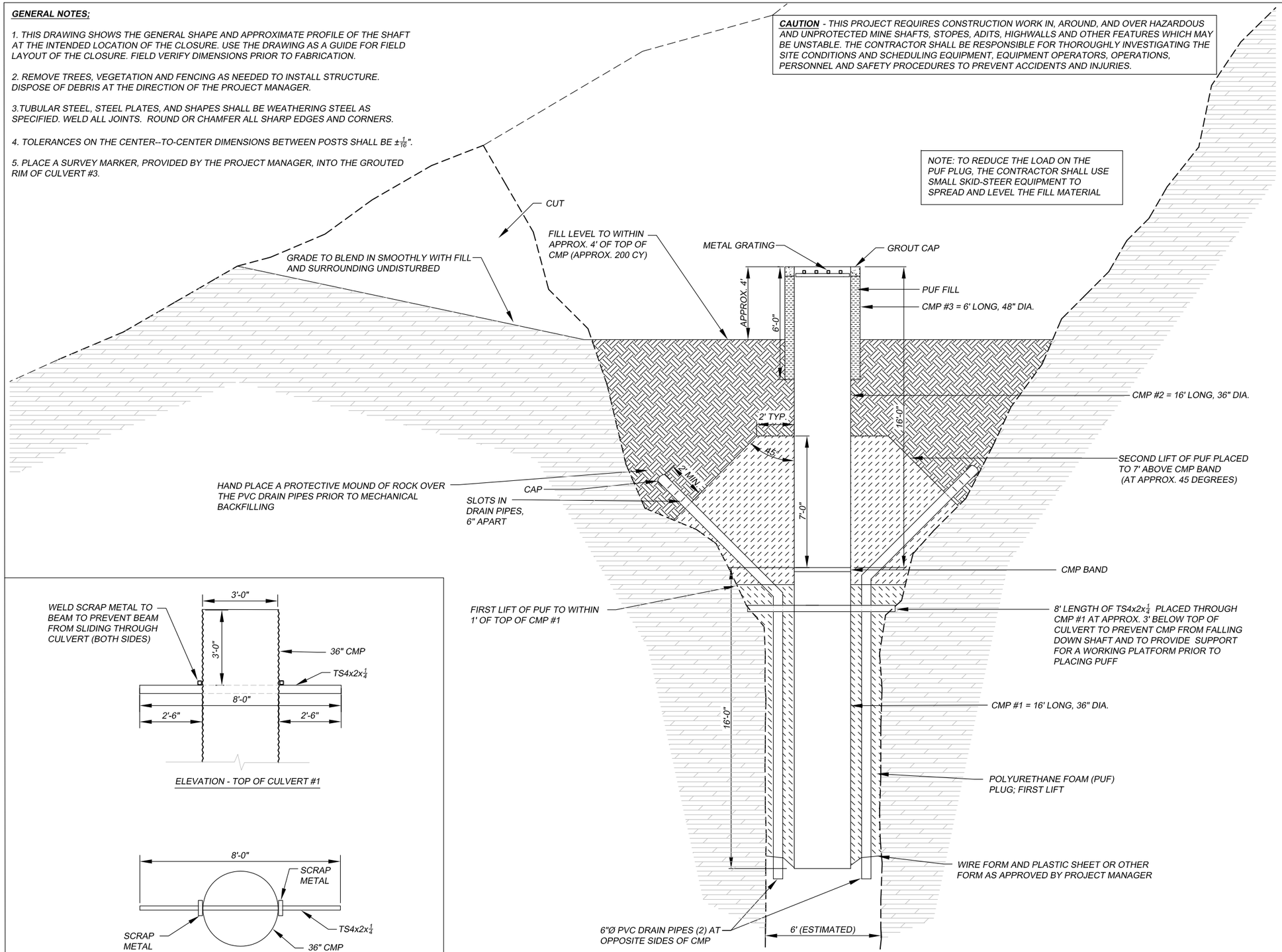

SECTION-SHAFT

SCALE $\frac{3}{16}$"=1'-0"

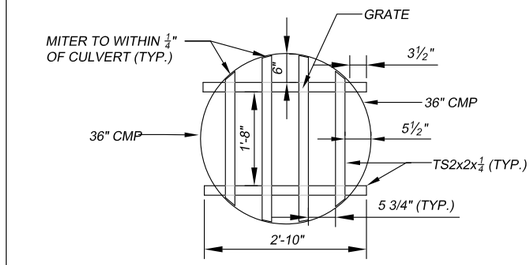

PLAN - CULVERT #2/GRATING

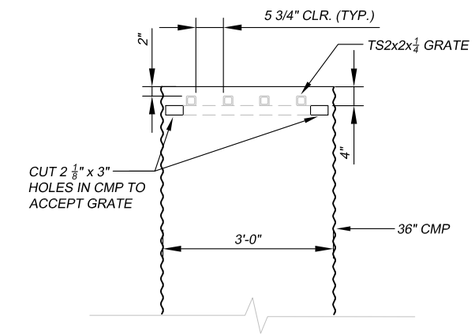

PROFILE - CULVERT #2

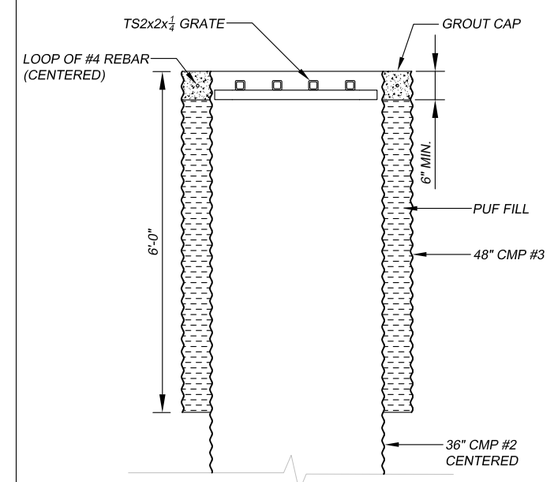

SECTION - TOP OF CULVERT #2 AND #3

CULVERT #2 AND #3 DETAILS

SCALE: $\frac{3}{8}$"=1'-0"

ELEVATION - TOP OF CULVERT #1

PLAN - CULVERT #1

CULVERT #1 DETAILS

SCALE: $\frac{1}{4}$"=1'-0"

ABANDONED MINE LAND PROGRAM
MINING AND MINERALS DIVISION
ENERGY, MINERALS AND NATURAL RESOURCES DEPARTMENT

SCALE: AS SHOWN	SHAFT 598-06	DRAWN BY: JTG
DATE: DEC. 03, 2012		REVISED: JAK
CMP/PUF PLUG		
Cleveland Mine Safeguard Project		DRAWING NUMBER: FIGURE 7